YOSHIMURA
RESEARCH&DEVELOPMENT OF AMERICA, INC.
5420 DANIELS STREET STE A, CHINO CA., 91710 · (800) 634-9166 · (909) 628-4722 · FACSIMILE (909) 591-2198
www.yoshimura-rd.com

RACE SERIES

Qualified Manufacturer Declared "Modified Part"

2015~2016
Yamaha R1
13141CP520 (SS/CF)

Stainless Steel Alpha Taper 3/4 System

FOR CLOSED COURSE COMPETITION ONLY; NOT INTENDED FOR STREET USE

Race Series systems are:
- NOT CARB/EPA tail-pipe emissions compliant.
- NOT street legal.
- For "Closed Course Competition" use only.

You must know how to remove and replace your stock exhaust in order to install this product otherwise have it installed by a professional mechanic. Keep all stock parts from your existing system as some components may be necessary to install your new Yoshimura exhaust depending on the application. Read through all instructions before beginning installation. Exhaust system can be extremely hot. Let motorcycle cool down before beginning installation. Always wear hand and eye protection and take precautionary measures to avoid injury.

NOTE: IN THE STATE OF CALIFORNIA, IT IS ILLEGAL TO MODIFY THE EMISSION CONTROL SYSTEM, WHICH INCLUDES THE CARBURETORS OF ANY VEHICLE.

Assembly Diagram

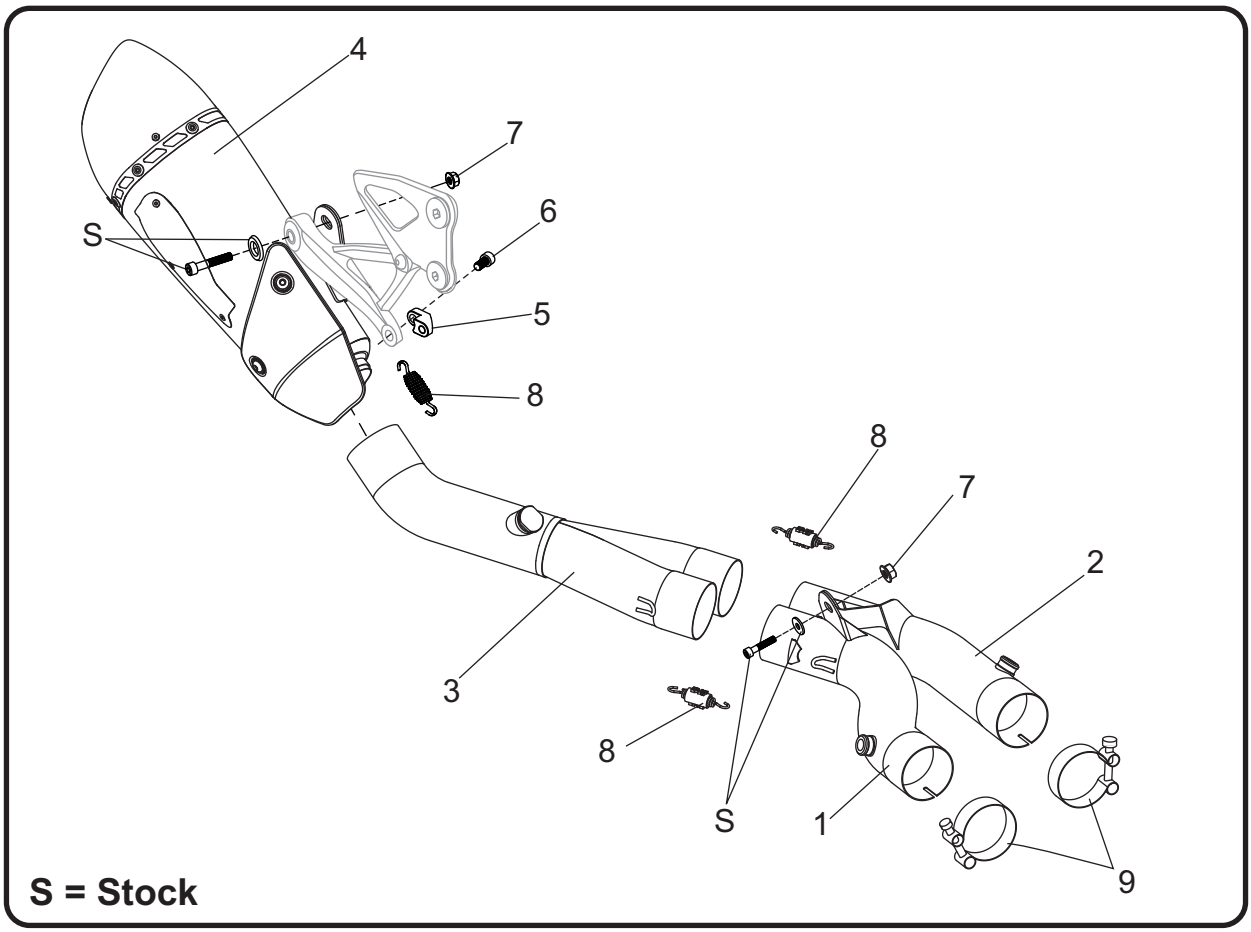

No.	Item	Description	Qty.
1	13100-410-1R	Yoshimura RH Midpipe	1
2	13100-410-1L	Yoshimura LH Midpipe	1
3	13141-413-1	Yoshimura Tailpipe	1
4	13141CP520-RMA	Yoshimura Muffler Assembly	1
5	13141-RMBKT	Muffler Bracket Adapter	1
6	M8X16	8mm x 16mm Socket Head Cap Screw	1
7	8MMNUT	8mm Flange Nut	2
8	RACE-SPS-1	Medium Exhaust Spring	3
9	27-68MSH	Exhaust Clamp	2
**	M18X13PLG	O2 Bung Plug	1
**	ST-200	Spring Puller	1
**	17029	Sticker Sheet	1

** Not shown on diagram.

Removal

1. Remove the muffler and header heatshields.

2. Remove the muffler exhaust clamp.

3. While securely supporting the stock muffler, remove the muffler mount bolt and carefully remove the stock muffler assembly.

4. Remove the two O2 sensors from the pre-muffler chamber assembly.

5. Disconnect and remove exhaust valve cables from the pre-muffler chamber assembly.

   Note[1]: Exhaust valve cables will not be used with the Yoshimura 3/4 system. Remove exhaust valve cables from servo motor.

   Note[2]: Do not disconnect servo motor connector.

6. Remove the three chassis mount bolts securing pre-muffler chamber assembly to frame.

7. While securely supporting the pre-muffler chamber assembly, loosen the two exhaust clamps between the header and carefully remove pre-muffler chamber assembly.

   Note: The stock exhaust gaskets will be reused with the Yoshimura 3/4 system. Inspect and replace if necessary.

Installation

1. Remove the lower muffler mount bracket bolt from right footpeg bracket. Install (No. 5) *13141-RMBKT*, muffler bracket adapter on the backside of the muffler mount bracket using the provided (No. 6) *M8X16*, bolt.

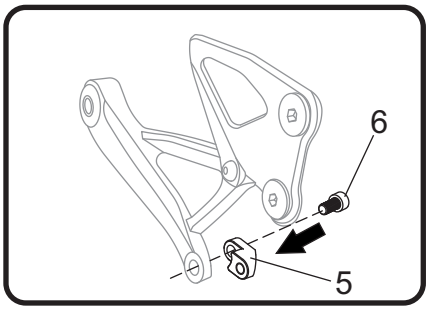

2. Align (No. 5) *13141-RMBKT*, muffler bracket adapter to the backside of the right footpeg bracket. Secure using the stock bolt.

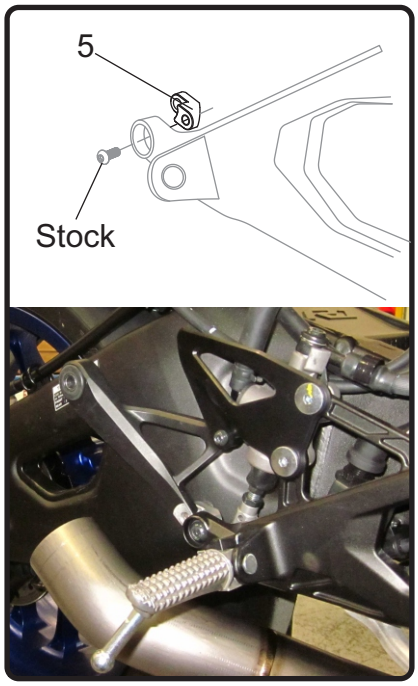

3. Install (No. 9) *27-68MSH,* exhaust clamp onto (No. 1,2) *13100-410-1L/R,* left and right tailpipe inlets. Do not torque at this time.

4. Install (No. 1,2) *13100-410-1L/R,* left and right right midpipe onto header outlet and align chassis mount bracket to chassis.

   Note: Installing the left and right midpipe simultaneously by interlocking both chassis mount brackets may ease installation.

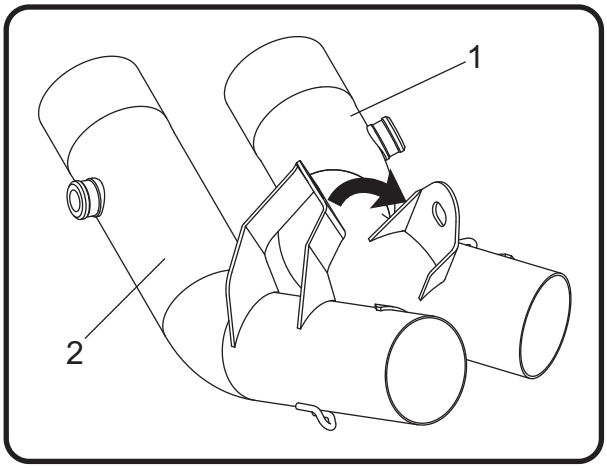

5. Secure left and right midpipe to chassis using the stock bolt, washer and provided (No.7) *8MMNUT,* nut as shown on the assembly diagram. Do not torque at this time.

6. Install (No. 3) *13141-413-1,* tailpipe onto (No. 1,2) *13100-410-1L/R,* midpipe outlet.

7. Install (No. 4) *13141CP520-RM*A, muffler over tailpipe outlet and secure to the backside of the stock muffler mount bracket using the stock bolt, stock washer, and (No. 7) *8MMNUT,* nut. See diagram for proper orientation and order of hardware. Torque muffler mount bolt to factory specification.

8. Install (No. 8) *RACE-SPS-1,* medium spring with insulator between the muffler and tailpipe.

9. Install (No. 8) *RACE-SPS-1,* medium springs between midpipe and tailpipe.

10. Torque the stock chassis mount bolt to factory specification.

11. Install the stock O2 sensors into (No. 1,2) *13100-410-1L/R,* left and right midpipe.

12. Torque (No. 9) *27-68MSH,* exhaust clamp to 8.5 Nm (0.86 kg-m, 6 ft-lb).

13. Before starting vehicle, check for proper clearance between new exhaust system and rear suspension (i.e. tire, swingarm, brakes, rear shock, and etc.)If any problem is found, please carefully follow through the installation steps again. If problem still persists, please call Yoshimura Tech Department at (800) 634-9166 / in CA (909) 628-4722.

14. It is recommended that the muffler and tailpipe be wiped down with rubbing alcohol to remove oil and fingerprints. This will help prevent tarnishing of the finish after the exhaust is heated up.

Works Finish Care & Maintenance

Before starting vehicle, clean pipe thoroughly using a soft cloth and rubbing alcohol to remove any oil and finger prints.

The color of the exhaust will change once the system has gone through a heat cycle of 15 minutes or more. Color will vary depending on lean/rich conditions.

Clean using a soft cloth and soap. Do not use abrasive materials as it will scratch the surface.

Surface reconditioning services are available to remove scratches and undesirable discoloration due to extreme heat. Contact Yoshimura Tech Department at (800) 634-9166 / in CA (909) 628-4722 for more information.